UniFi® 6 Long-Range

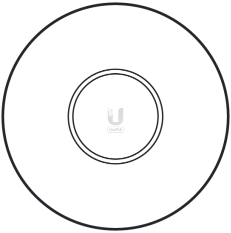

a

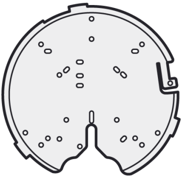

b

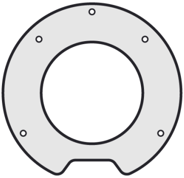

c

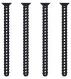

d

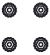

e

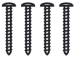

f

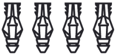

g

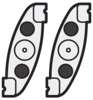

h

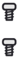

i

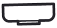

j

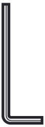

k

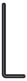

l

1

A

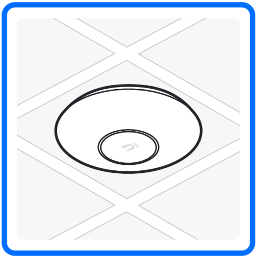

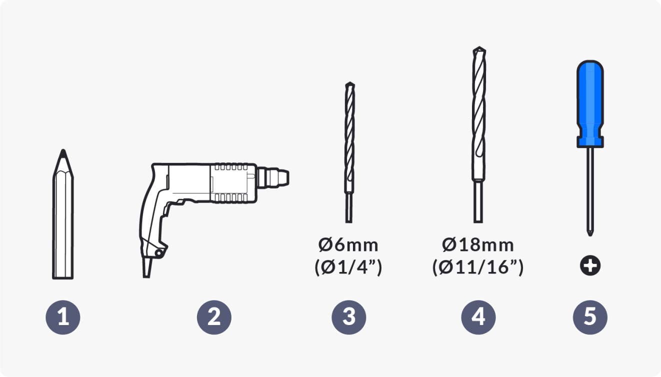
Ø6mm
(Ø1/4”)
Ø18mm
(Ø11/16”)
⊕
1
2
3
4
5

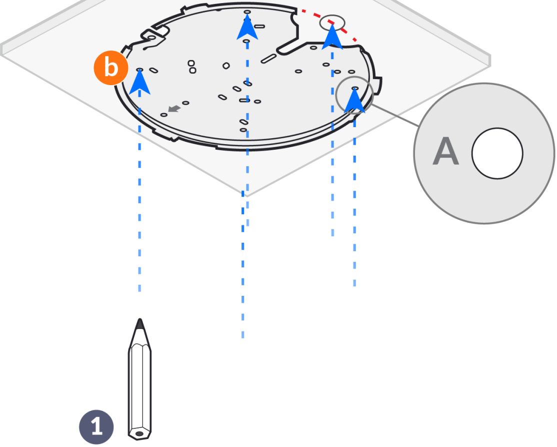

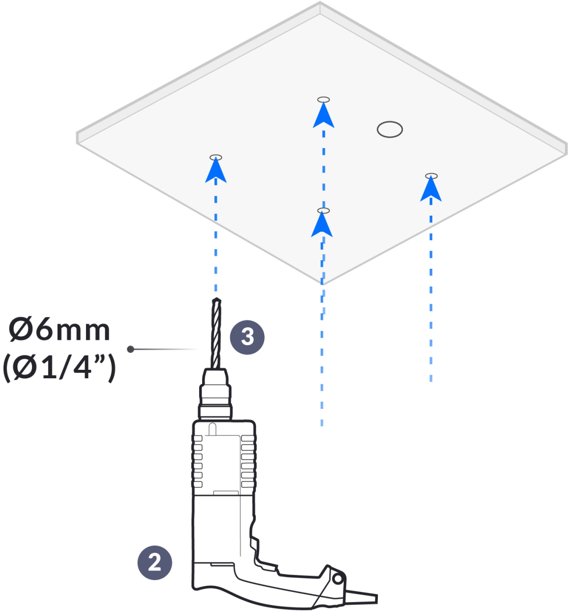

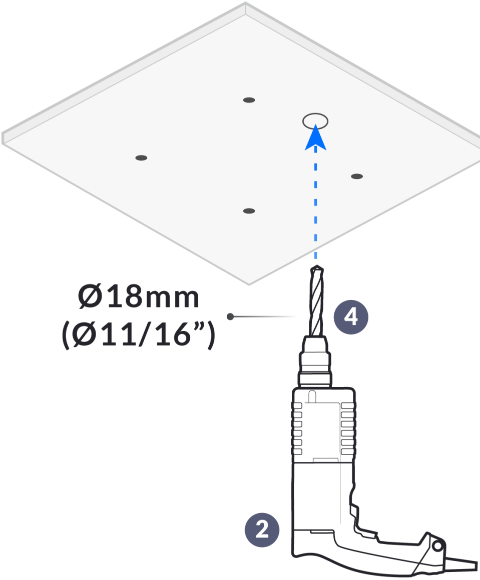
Ø18mm
(Ø11/16")
4
2

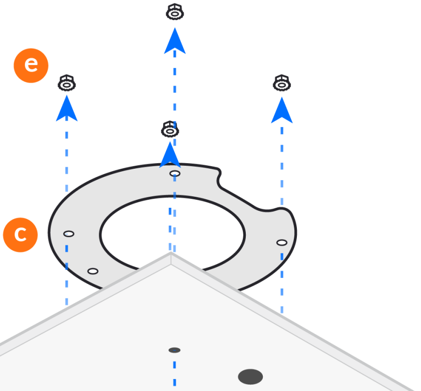

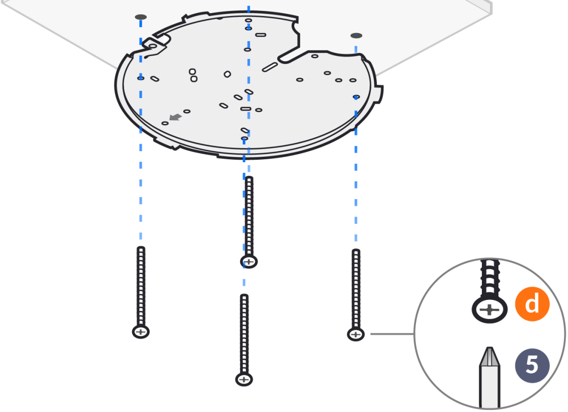

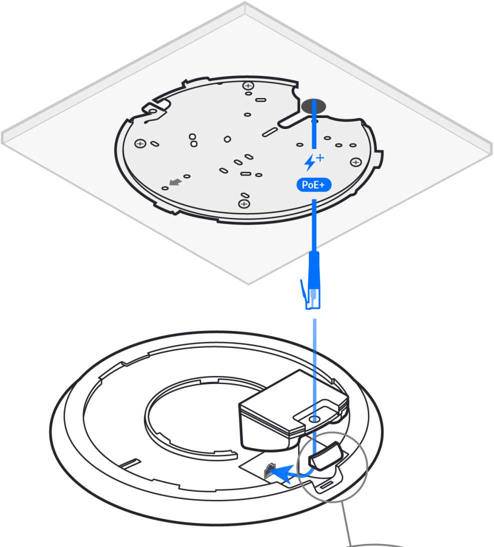

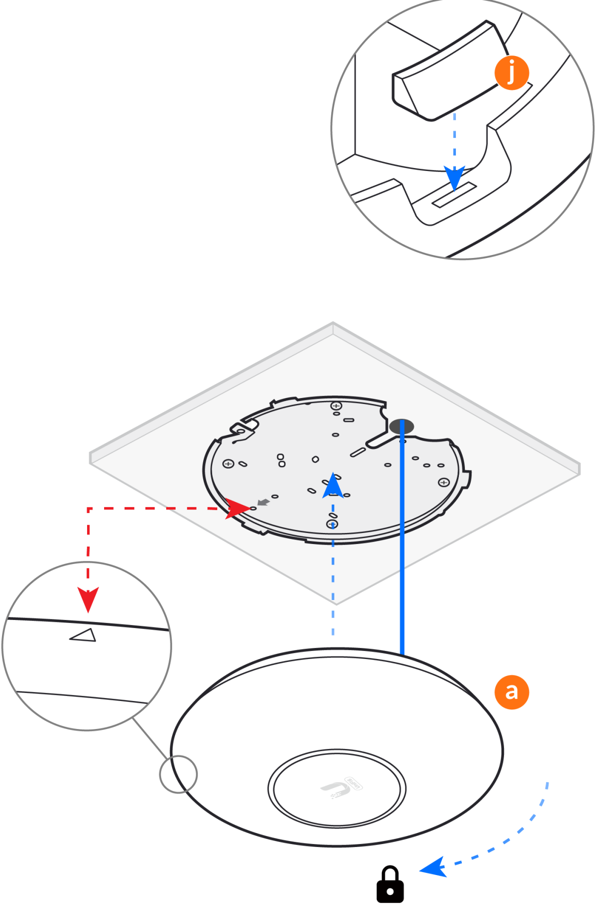

B

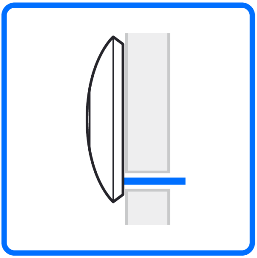

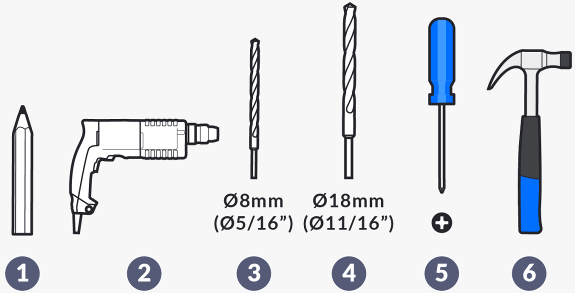
Ø8mm
(Ø5/16”)
Ø18mm
(Ø11/16”)
⊕
1
2
3
4
5
6

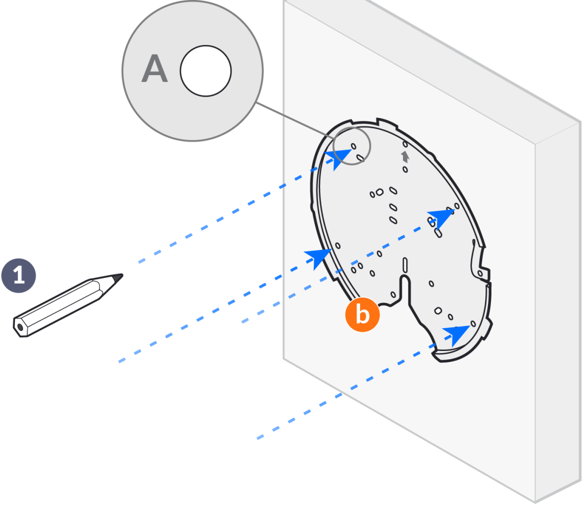

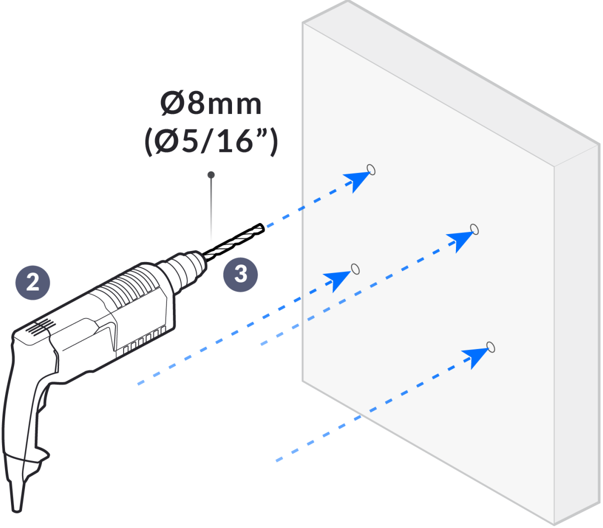
Ø8mm
(Ø5/16”)

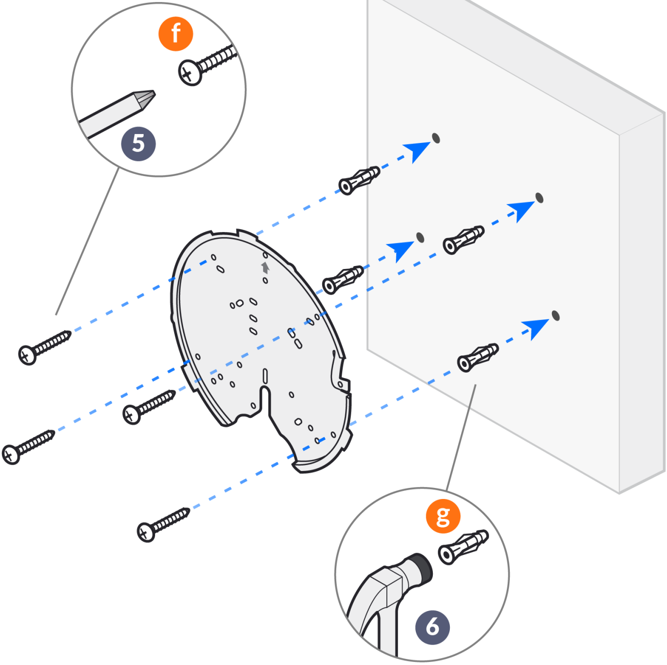

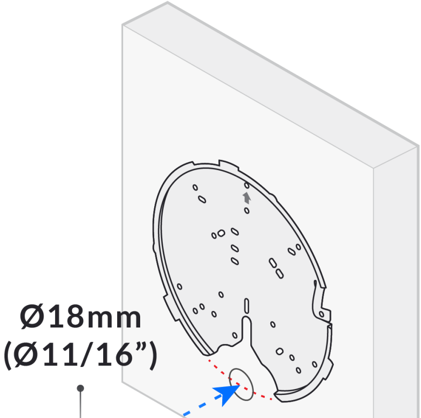
Ø18mm
(Ø11/16”)

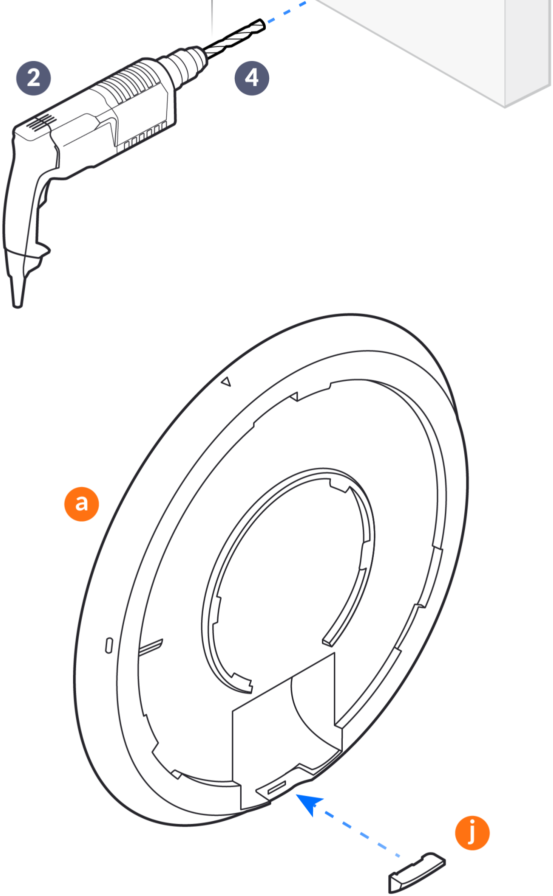

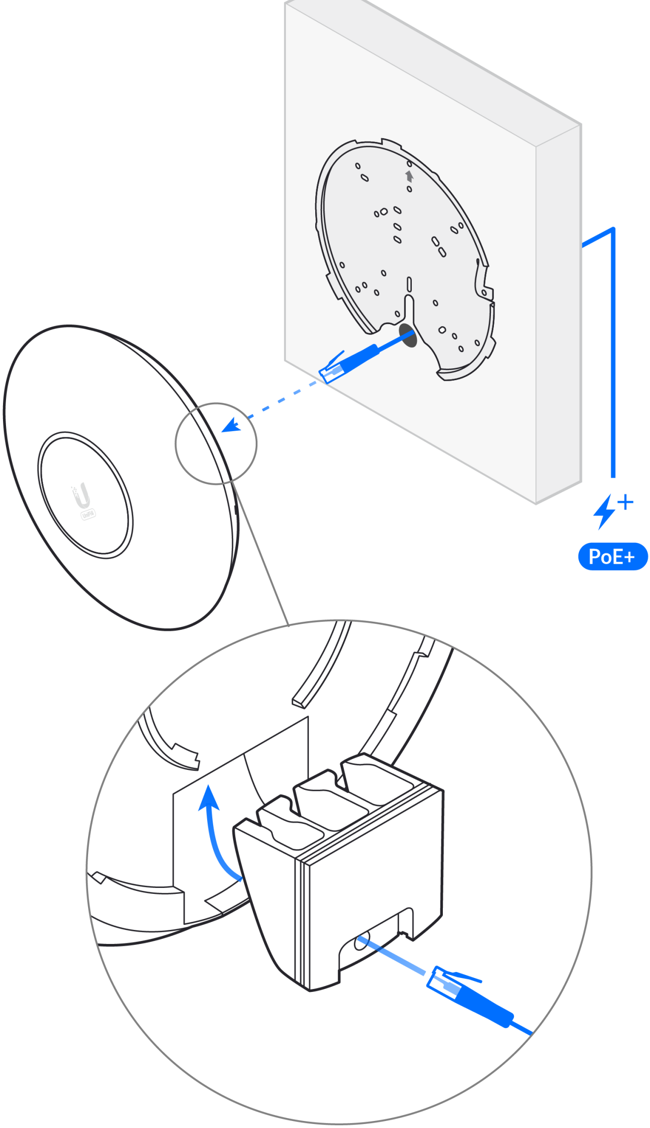

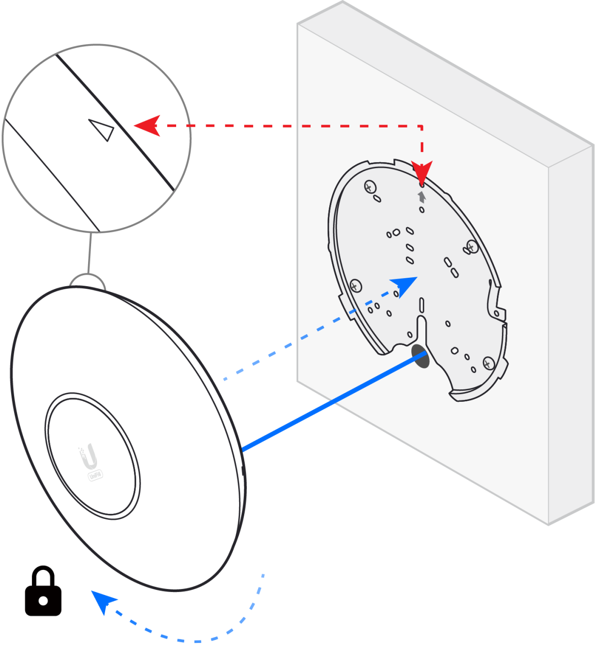

C

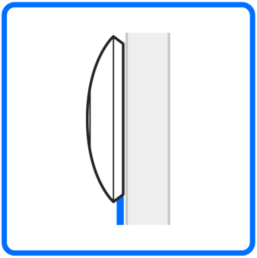

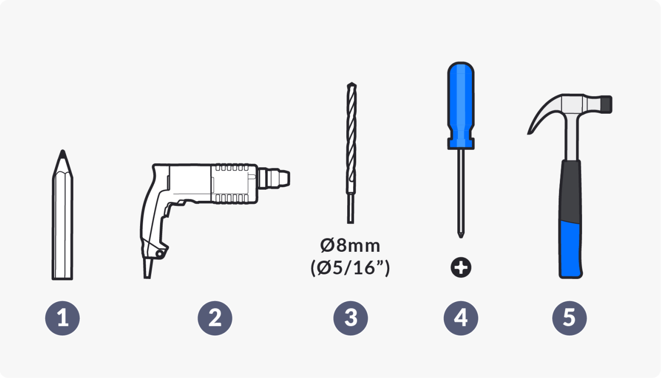
Ø8mm
(Ø5/16”)
1
2
3
4
5

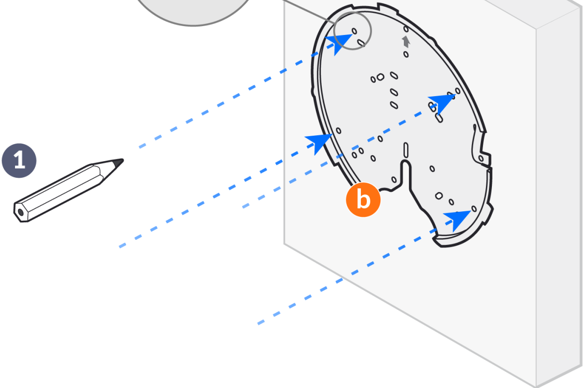

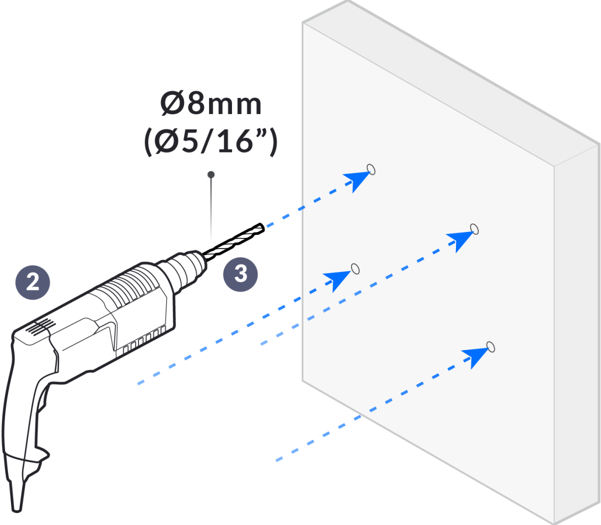
Ø8mm
(Ø5/16”)
2
3

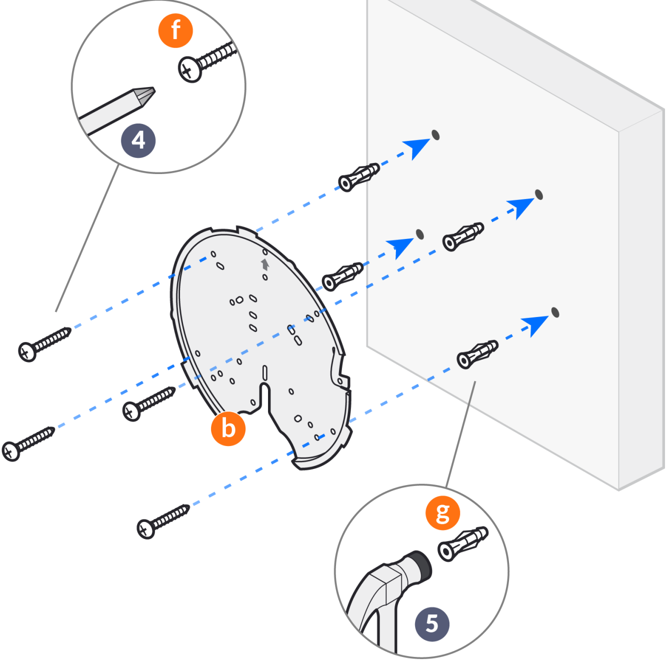

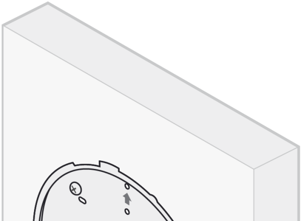

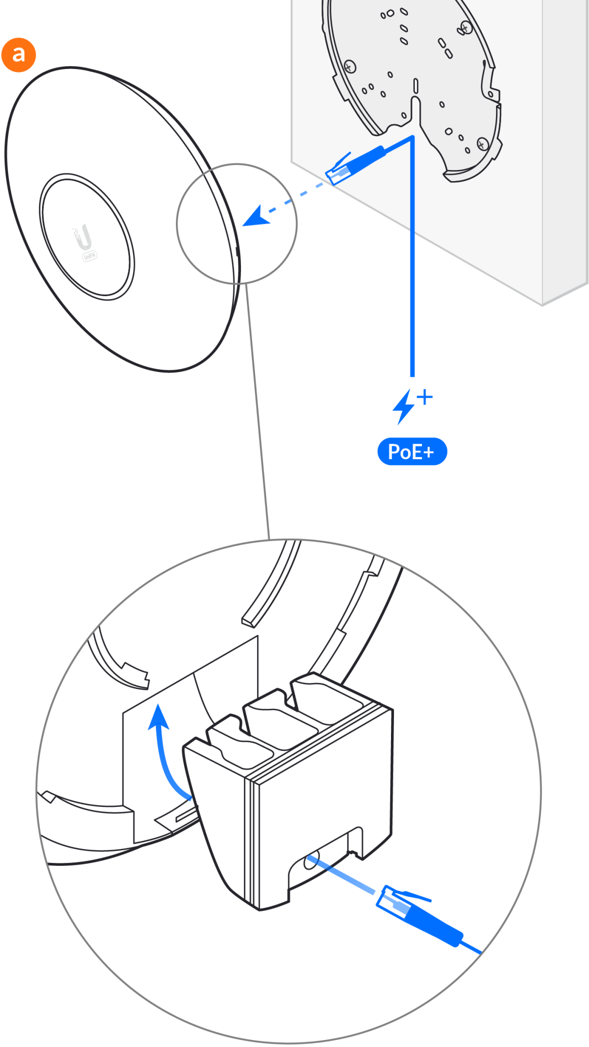

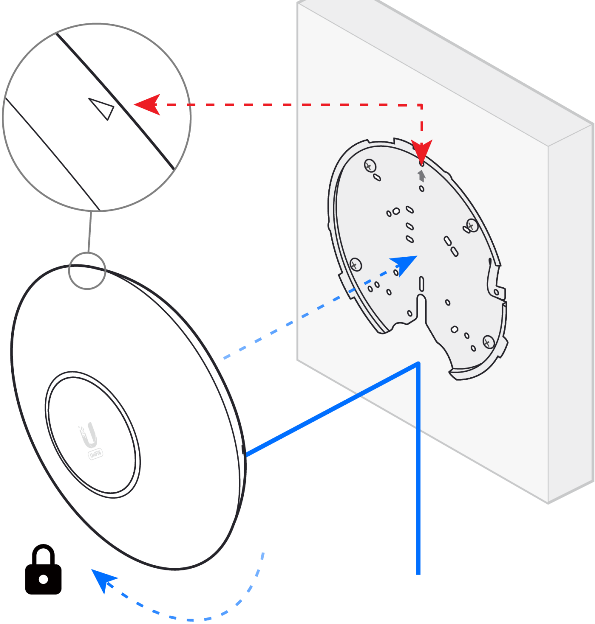

D

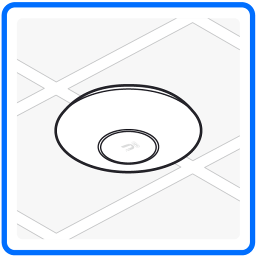

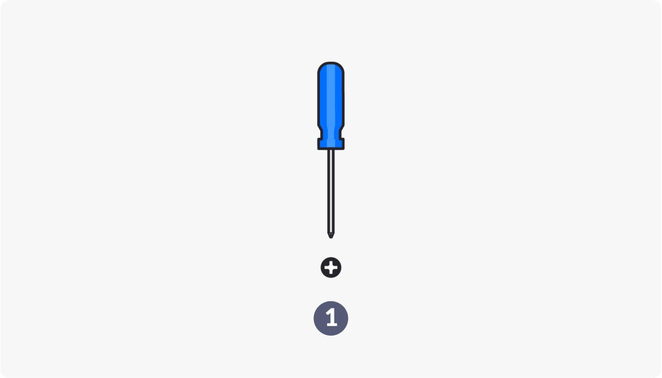

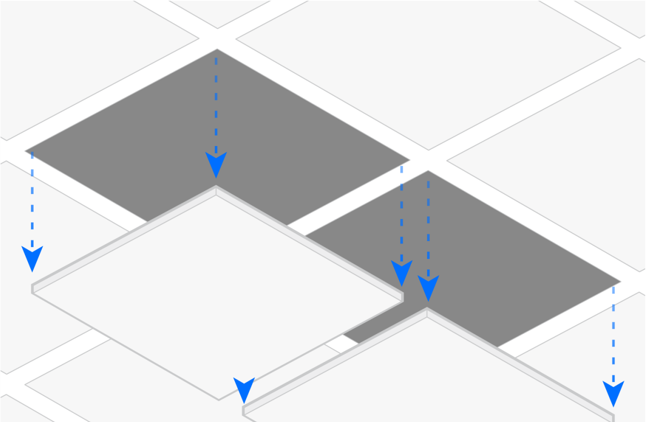

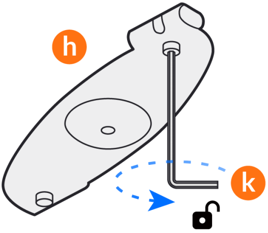

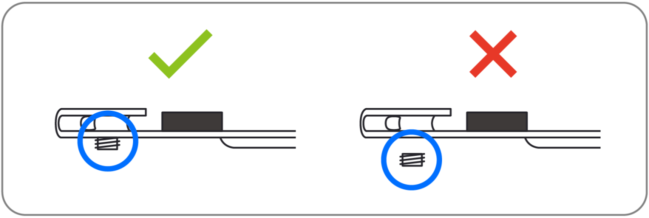

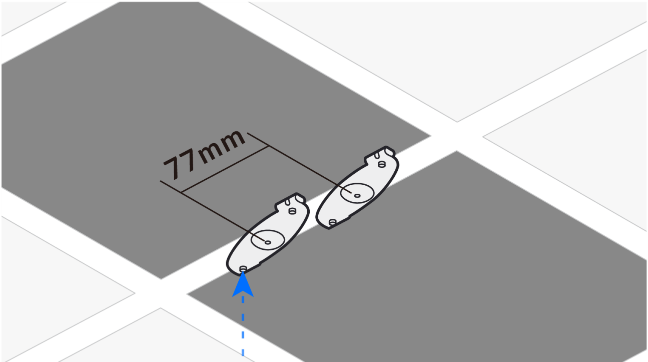

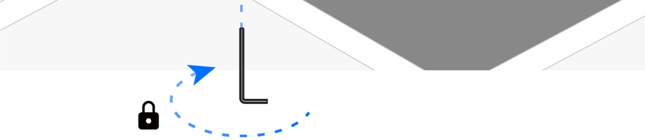

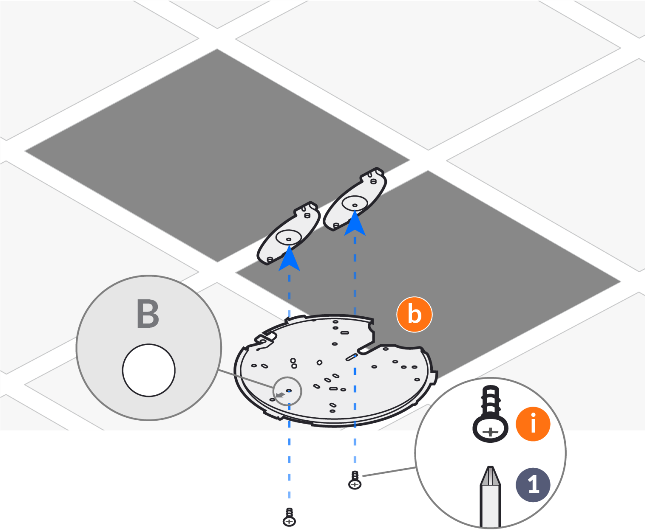

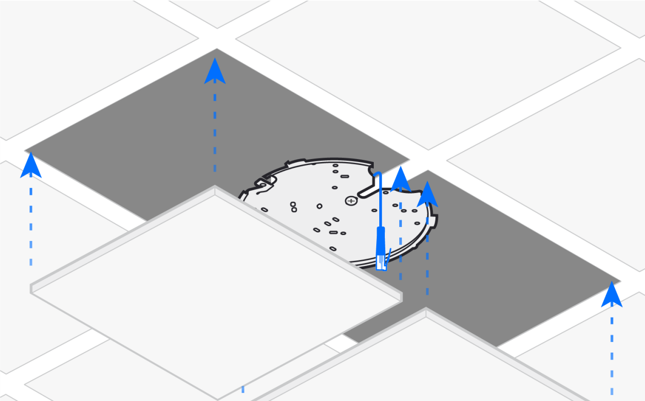

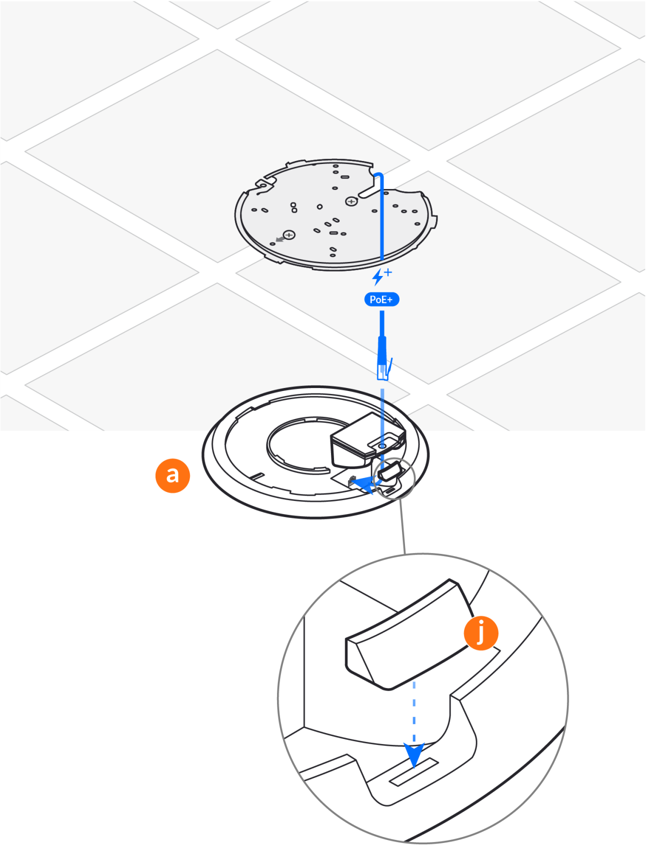

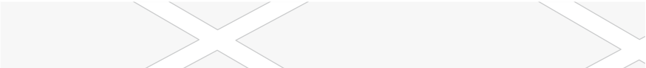

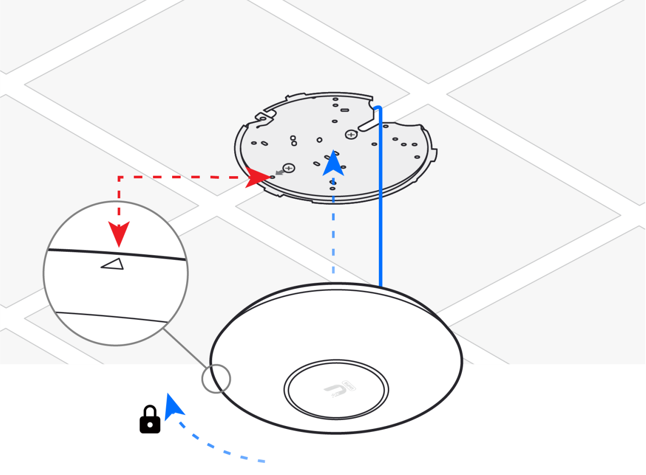

E

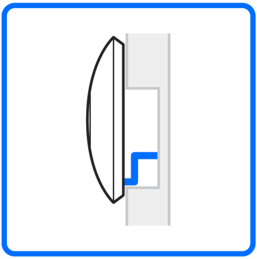

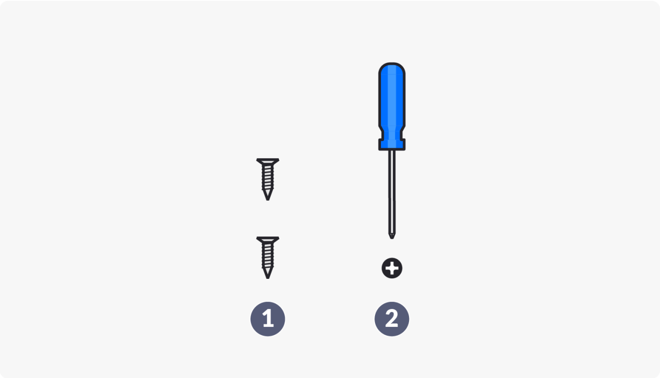

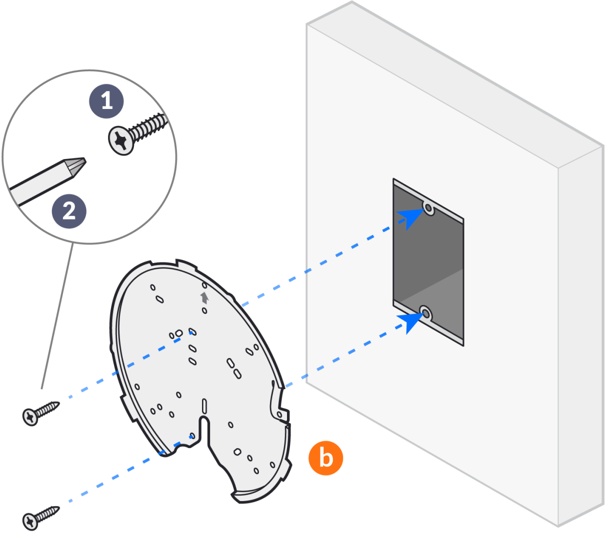

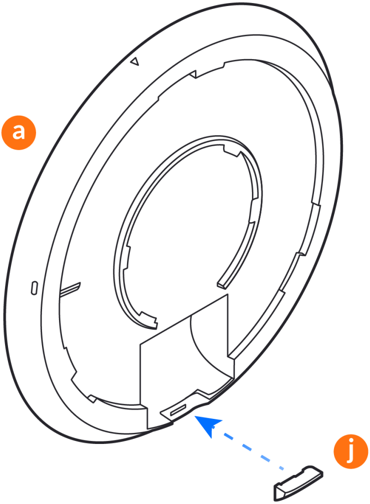

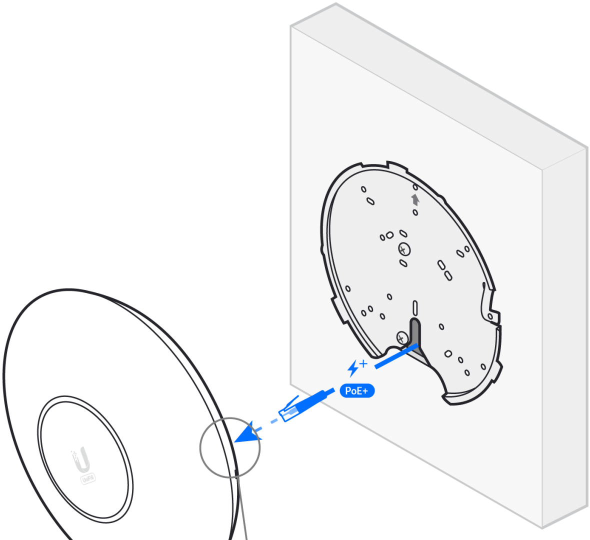

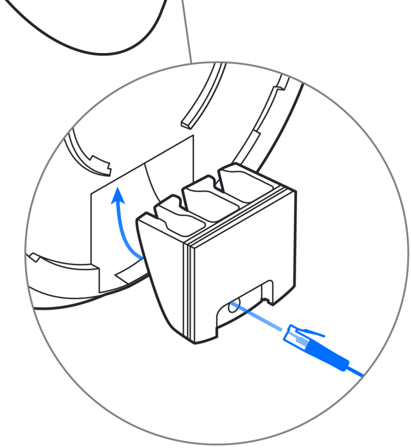

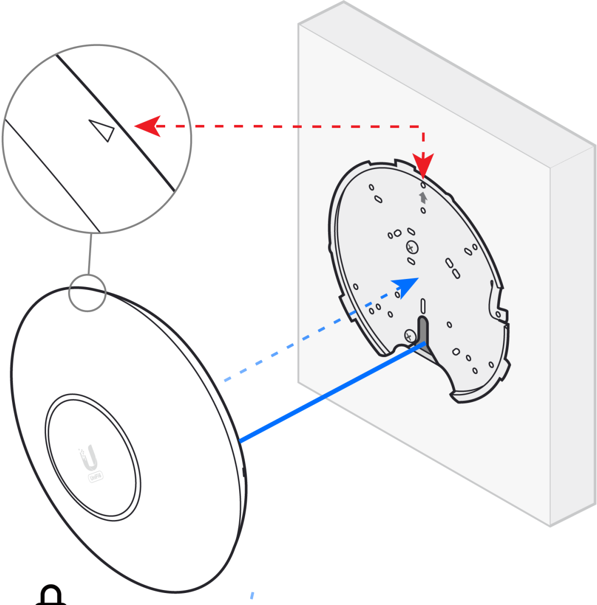

2

A

Internet

B

Wi-Fi

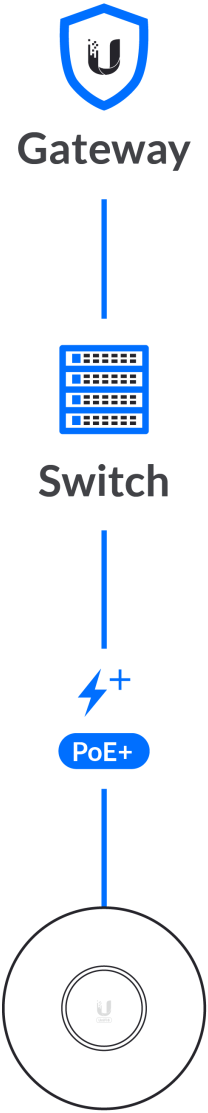
Gateway
Switch
PoE+

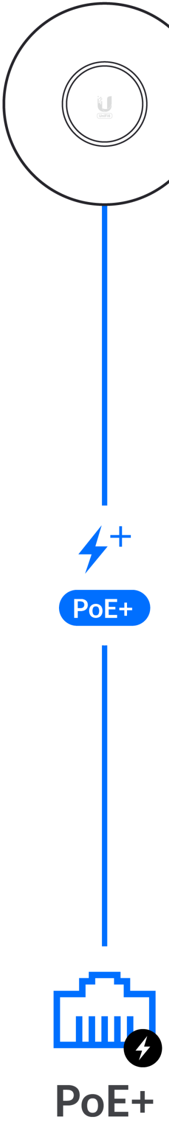

3

Download on the App Store

GET IT ON Google Play

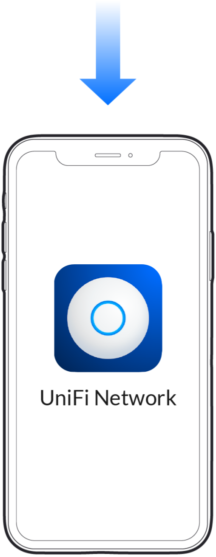
UniFi Network

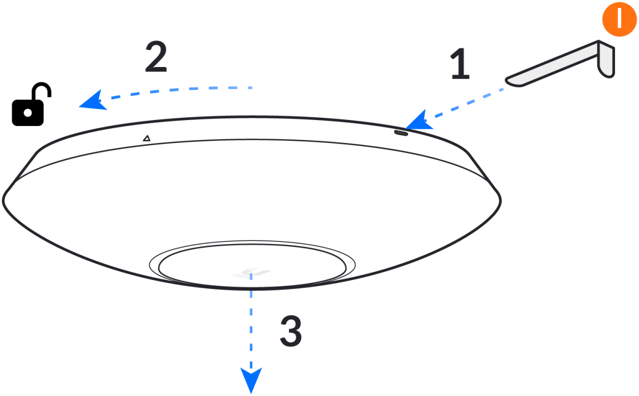

UniFi Network

🔗

Get Answers
help.ui.com

UI Support

🔗