TOA

OPERATING INSTRUCTIONS

UHF WIRELESS MICROPHONE WM-4300

Please follow the instructions in this manual to obtain the optimum results from this unit.
We also recommend that you keep this manual handy for future reference.

1. SAFETY PRECAUTIONS

- Be sure to read the instructions in this section carefully before use.
- Make sure to observe the instructions in this manual as the conventions of safety symbols and messages regarded as very important precautions are included.
- We also recommend you keep this instruction manual handy for future reference.

Safety Symbol and Message Conventions

Safety symbols and messages described below are used in this manual to prevent bodily injury and property damage which could result from mishandling. Before operating your product, read this manual first and understand the safety symbols and messages so you are thoroughly aware of the potential safety hazards.

⚠ **WARNING**	Indicates a potentially hazardous situation which, if mishandled, could result in death or serious personal injury.
⚠ **CAUTION**	Indicates a potentially hazardous situation which, if mishandled, could result in moderate or minor personal injury, and/or property damage.

⚠ WARNING

- To prevent the electromagnetic wave from badly influencing medical equipment, make sure to switch off the unit's power when placing it in close proximity to the medical equipment.

⚠ CAUTION

- When the unit is not in use for 10 days or more, be sure to take the battery out of the unit because battery leakage may cause personal injury or contamination of environment.
- Make sure to observe the following handling precautions so that a fire or personal injury does not result from leakage or explosion of the battery.

  · Do not short, disassemble, heat nor put the battery into a fire.
  · Never charge batteries of the type which are not rechargeable.
  · Do not solder a battery directly.
  · Be sure to use the specified type of battery.
  · Note correct polarity (positive and negative orientation) when inserting a battery in the unit.
  · Avoid locations exposed to the direct sunlight, high temperature and high humidity when storing batteries.

TOA Corporation

2. GENERAL DESCRIPTION

The wireless microphone WM-4300 is of lavalier type designed for use on UHF band. It accommodates the supplied electret condenser microphone unit with a cardioid pick-up pattern and is suitable for vocal and speech reinforcement applications.
The built-in circuitry is so designed to minimize the influence from ambient noise.

3. FEATURES

- One frequency can be selected from 64 operating frequencies (4 banks x 16 channels) of 64 frequencies of 690 – 865 MHz.
- An optimized PLL-synthesizer minimizes the oscillation frequency drift resulting from the ambient temperature or voltage fluctuation.
- Audio level control adjusts the microphone sensitivity.
- Battery lamp indicates battery consumption to prevent the unit from malfunctioning when the battery level remarkably decreases.
- Compact size and high reliability
- A commercial microphone unit of the type equivalent to the supplied one can also be used.

4. HANDLING PRECAUTIONS

- Do not expose the unit to rain or an environment where it may be splashed by water or other liquids, as doing so may result in unit failure.
- Never open nor remove the unit case to modify the unit. Refer all servicing to your nearest TOA dealer.
- Take care not to drop the unit onto the floor nor bump it against a hard object as the unit could fail.
- Do not place the unit in locations of high temperature (ex. in a car parked in summer) or high humidity as the unit could fail.
- Do not use the unit in locations where it is exposed to seawater.
- To clean, use a dry cloth. When the unit gets very dirty, wipe lightly with a cloth damped in a dilute neutral cleanser, then wipe with a dry cloth. Never use benzine, thinner, or chemically-treated cleaning towel.
- Avoid using a mobile telephone near the wireless microphone in use. Noise could be picked up.

5. NOMENCLATURE

[Main unit]

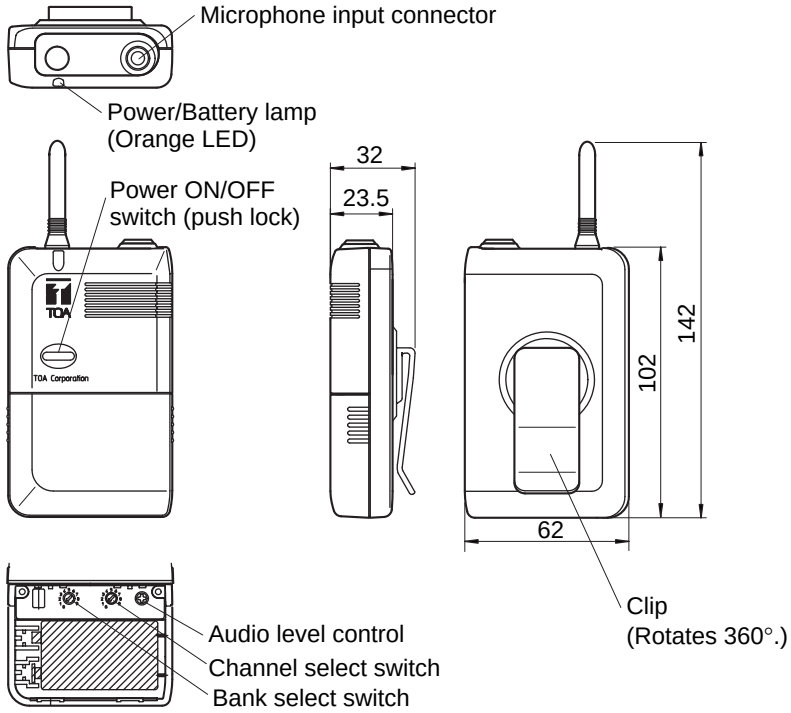

[Microphone unit]

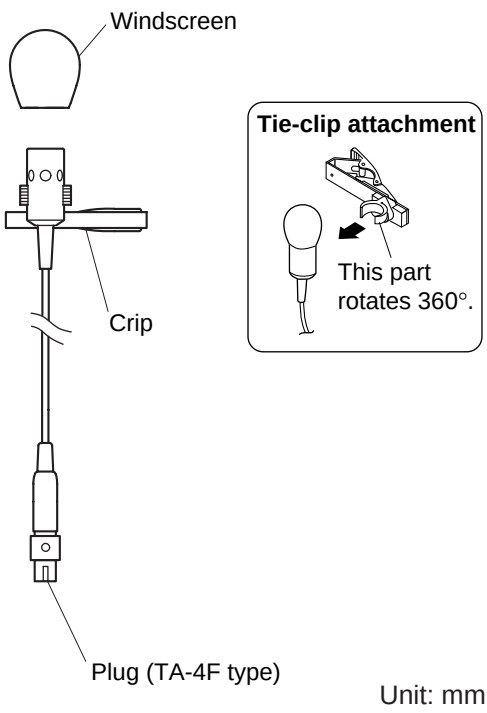

Unit: mm

6. BATTERY INSERTION

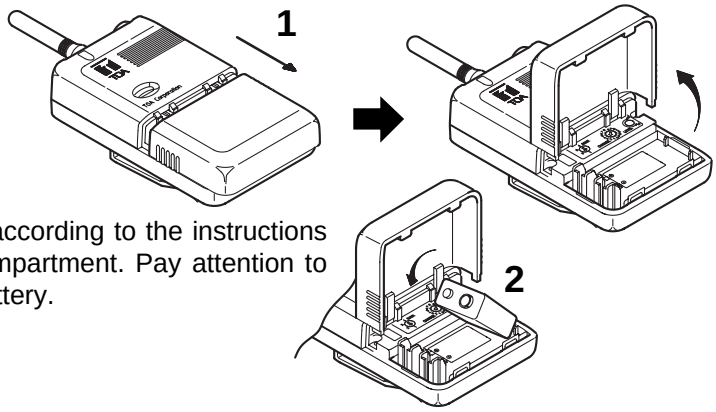

Step 1. Holding the microphone body, slide the battery cover down to open it. The battery cover is designed not to be removed from the body.

Step 2. Insert the battery 6LR61 (Alkaline 9 V) according to the instructions attached to the inside of the battery compartment. Pay attention to the correct polarity when inserting the battery.

Step 3. Replace the battery cover.

Battery replacement

- A brand-new battery will provide the power enough to operate the unit continuously for 10 hours.
- As long as the battery has sufficient power for the microphone to function properly, the orange LED will light. When the orange LED starts to fade and then flash, replace it with a new one.

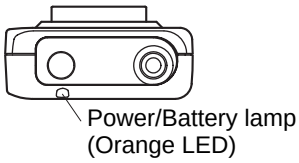

7. OPERATION

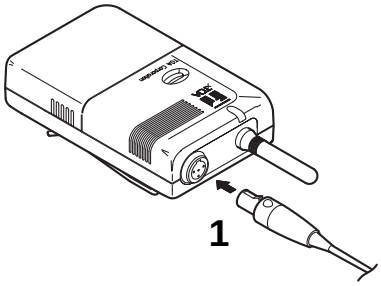

Step 1. Plug the microphone's plug into the input connector as illustrated.
Step 2. Make sure that the receiver and the wireless microphone are of the same bank and channel (frequency).
Step 3. If they are not identical in bank and channel (frequency), you have to adjust the bank and channel switches.
Step 4. Press the microphone ON/OFF switch to turn on the microphone. The orange LED indicates the circuit is active.
Step 5. Make sure to press the ON/OFF switch to turn off the microphone again after using.

8. OPERATIONAL HINTS

- The microphone's service distance is 3 – 150 m. When the microphone user moves in a facility, signal dropouts (momentary losses of signal reception) may be encountered. These dropouts are caused by the building's architectural designs or materials which block the travel of or reflect the radio signal. If this occurs, the user needs to change locations for better signal reception.
- The proper operation of your wireless system may be interfered with by other system operating on the same frequency. In such cases, change the operating frequency of your system. It is recommended that the Scan function (of the WT-4800) be used to avoid the frequency interference, which always searches and shows idle frequencies.
- Should you have any questions regarding the use or availability of TOA wireless products, please contact your local TOA dealer.

9. DISTANCE BETWEEN THE MICROPHONE AND THE MOUTH

Keep your mouth 15-20 cm away from the microphone for the best possible sound reproduction. Take care not to bring your mouth too close to the microphone (within 5 cm) as this impairs speech clarity if you speak loudly.

10. BANK/CHANNEL NUMBER SETTINGS

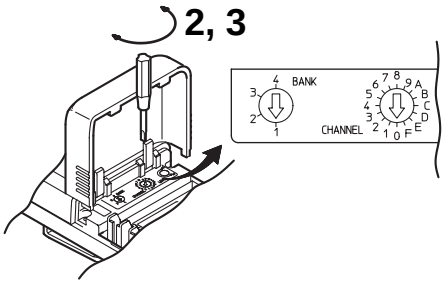

Step 1. Slide the battery cover down to open it.
Step 2. Using the supplied screwdriver, set the Bank setting switch pointer to the desired bank number.
Step 3. Using the supplied screwdriver, set the Channel setting switch pointer to the desired channel number.
Step 4. Replace the battery cover.

Note

Make sure that the wireless microphone is identical to the wireless tuner in both the bank and channel numbers. Should the microphone's setting differ from that of the tuner, the tuner does not receive the microphone signal.

11. AUDIO LEVEL ADJUSTMENT (SENSITIVITY CONTROL)

To change the factory-preset level, follow the procedures below.

Step 1. Holding the microphone body, slide the battery cover down to open it. The battery cover is designed not to be removed from the body.

Step 2. Switch on the power of the tuner and microphone.

Step 3. Adjust the audio level control using the supplied screwdriver. The microphone sensitivity increases as the control is rotated clockwise, and decrease as rotated counterclockwise.

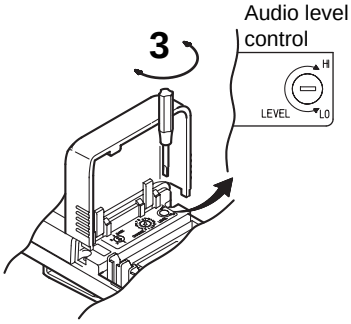

Step 4. Adjust the corresponding tuner's volume control so that its knob points to the 2 o'clock position. If the tuner's AF PEAK indicator remains lit, readjust the microphone's audio level control to the position that causes the indicator to flash when the tuner output level reaches its peak. The AF PEAK indicator lights when the output level reaches the point of about 3 dB below the clipping level.

Note

The AF PEAK indicator operates in response to the volume control position.
However, the AF LEVEL indicator (on the WT-4800) indicates the level regardless of the volume control setting.

Step 5. Replace the battery cover.

12. CONNECTOR PIN FUNCTIONS

The microphone's input connector is of TA-4F type.

[Input connector pin assignment]

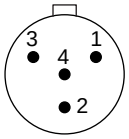

1. Ground
2. DC power (+5 V)
3. Audio
4. Audio/+5 V (2.2 kΩ to DC power)

13. SPECIFICATIONS

Microphone Element	Electret condenser type, cardioid pattern
Emission	F3E
Frequency Range	690 – 865 MHz, UHF
Selectable Channel	64 frequencies (These may differ in countries.)
RF Carrier Power	Less than 50 mW
Tone Frequency	32.768 kHz
Modulation System	PLL synthesizer
Maximum Input Level	120 dB SPL
Battery	6LR61(9 V x 1)
Battery Life	10 hours (alkaline)
Indicator	Power/Battery lamp (common use)
Antenna	1/4 λ herical type
Operating Temperature	–10 to +50°C
Finish	Resin, coating, dark gray
Dimensions	62 (w) x 142 (h) x 32 (d) mm
Weight	150 g (with battery)

• Accessories

Screwdriver (for setting) 1
Channel identification seal 1
Storage case 1

Note: The design and specifications are subject to change without notice for improvement.

License requirement

Operation is subject to the following two conditions:
(1) This device may not cause harmful interference, and (2) this device must accept any interference received, including interference that may cause undesired operation.