Access Point U6+

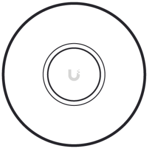

a

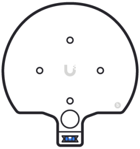

b

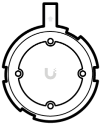

c

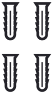

d

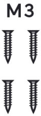

e

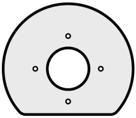

f

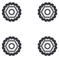

g

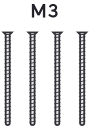

h

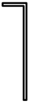

i

1

A

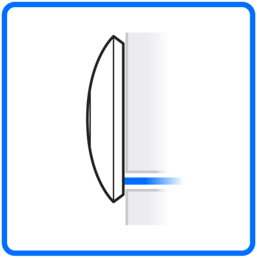

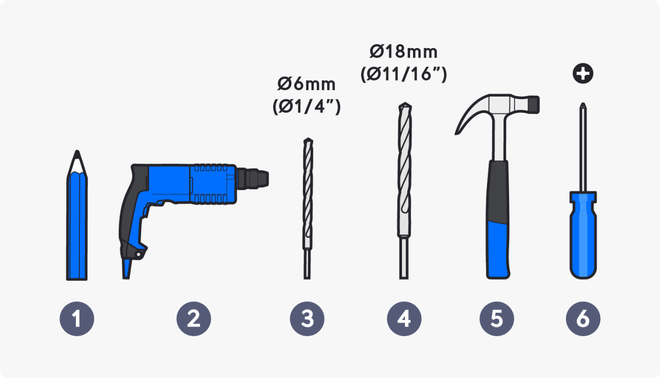
Ø6mm
(Ø1/4")
Ø18mm
(Ø11/16")
1
2
3
4
5
6

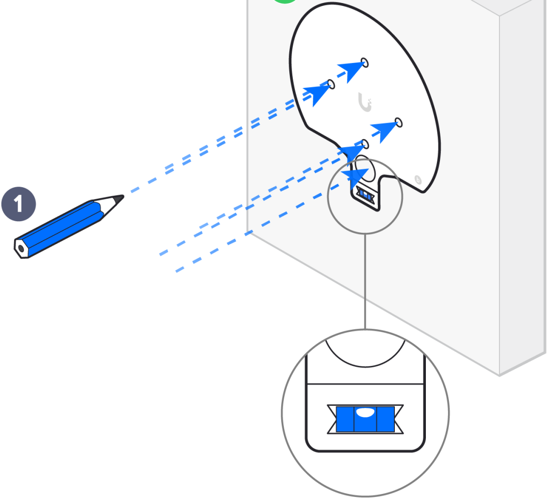

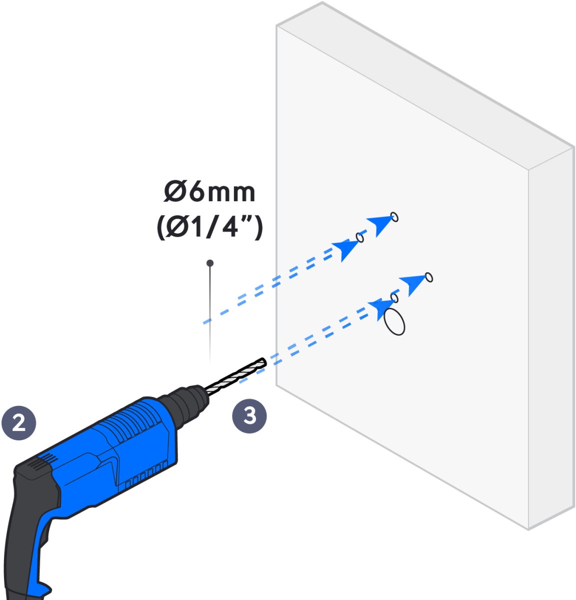

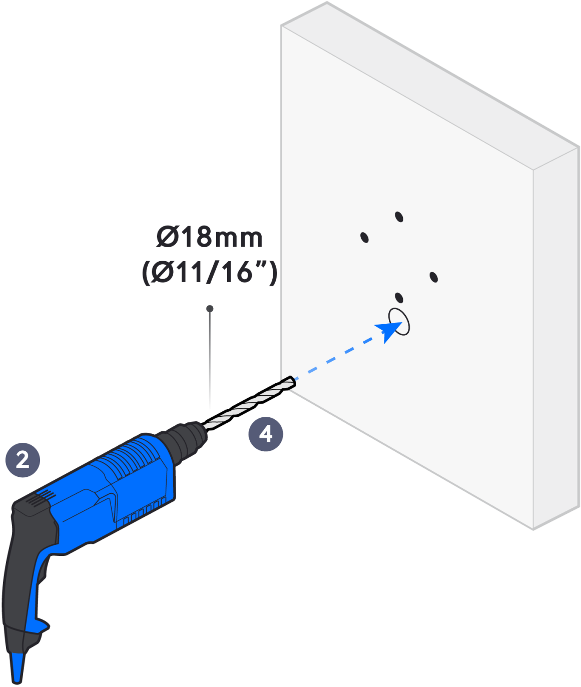
Ø18mm
(Ø11/16”)
2
4

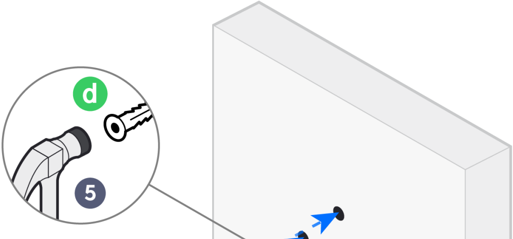

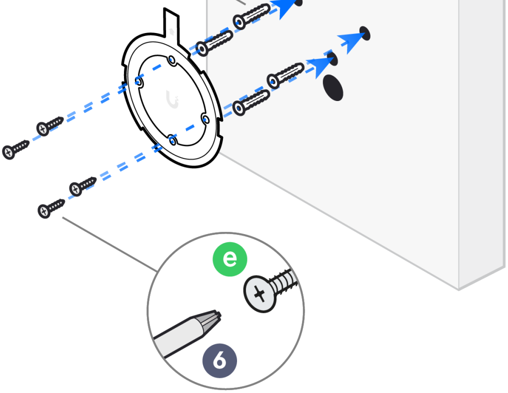

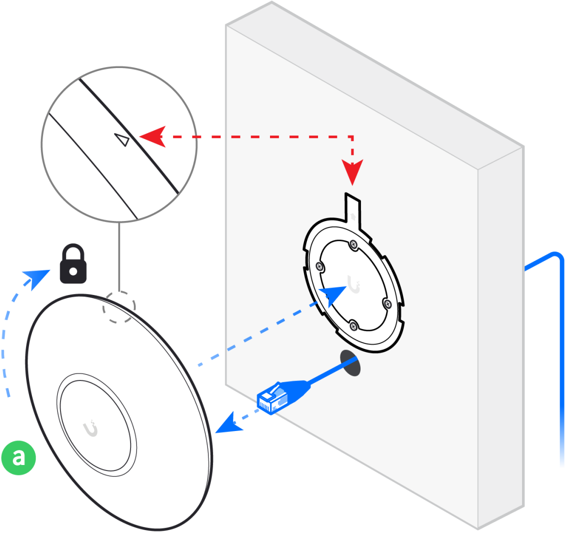

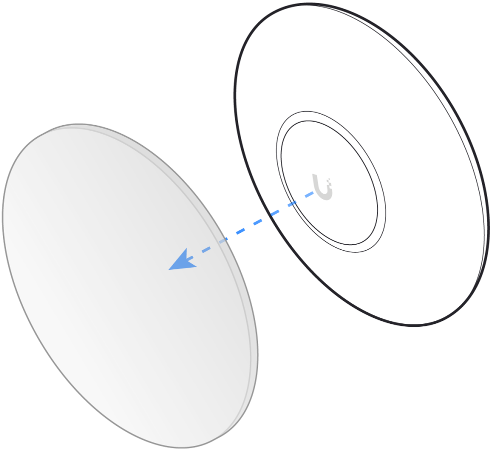

B

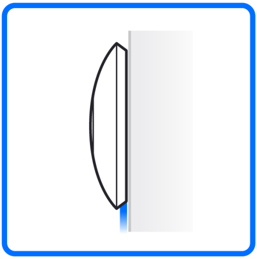

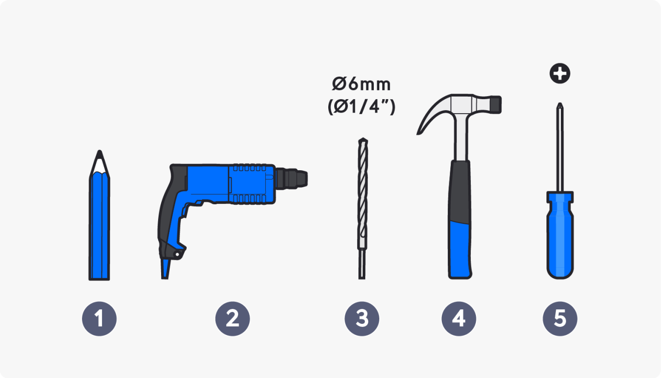
Ø6mm
(Ø1/4”)
1
2
3
4
5

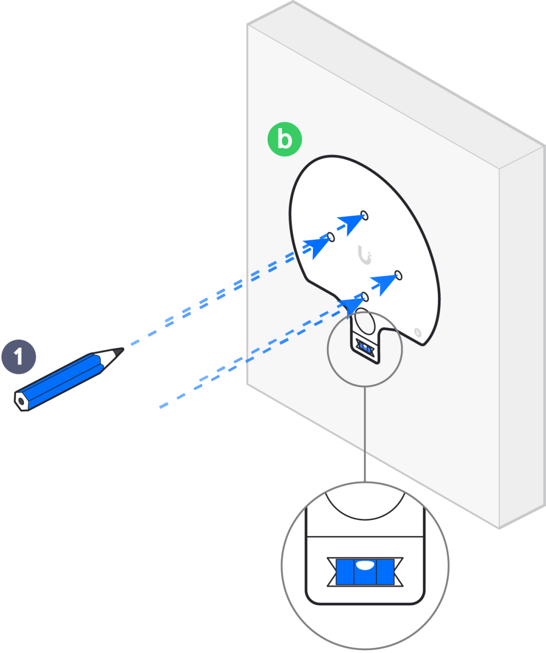

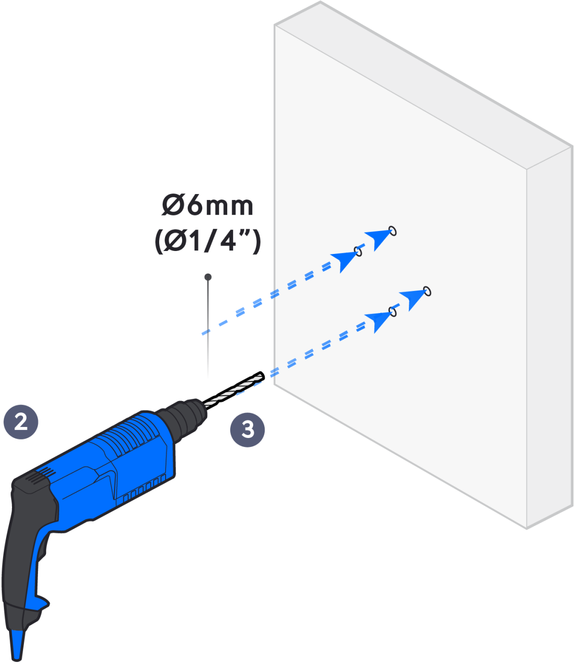

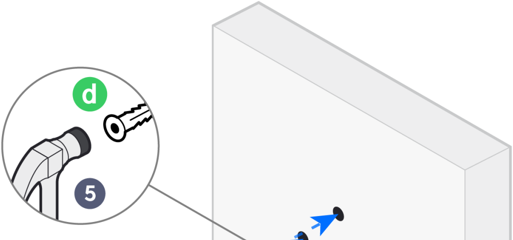

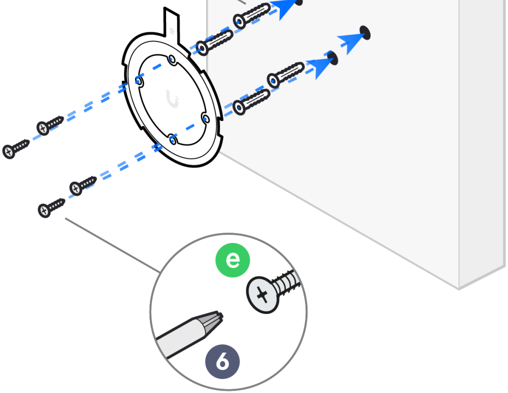

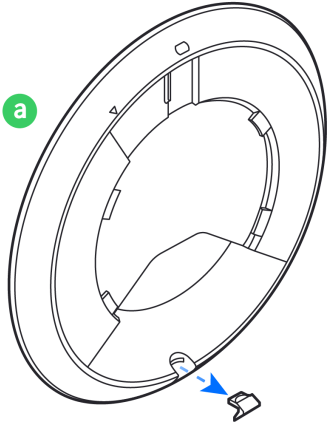

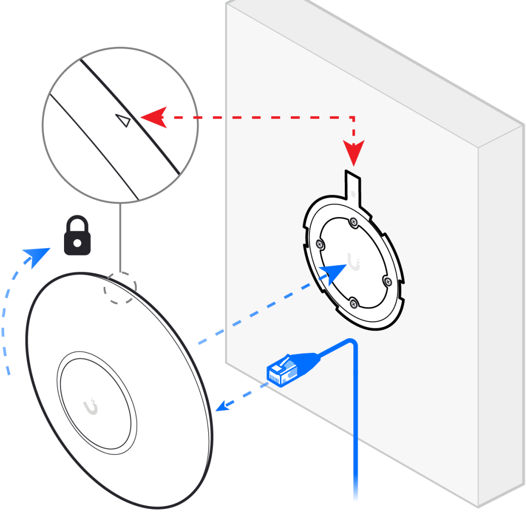

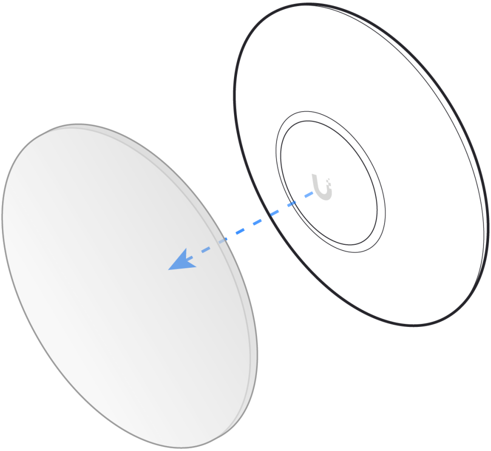

C

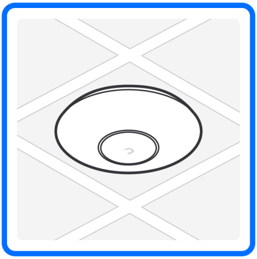

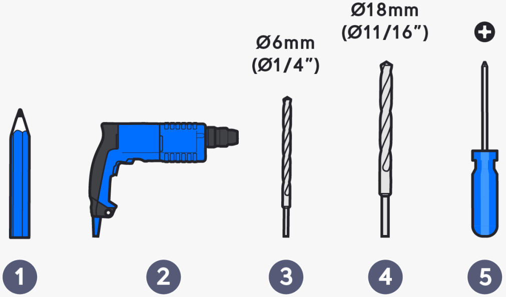
Ø6mm
(Ø1/4")
Ø18mm
(Ø11/16")
1
2
3
4
5

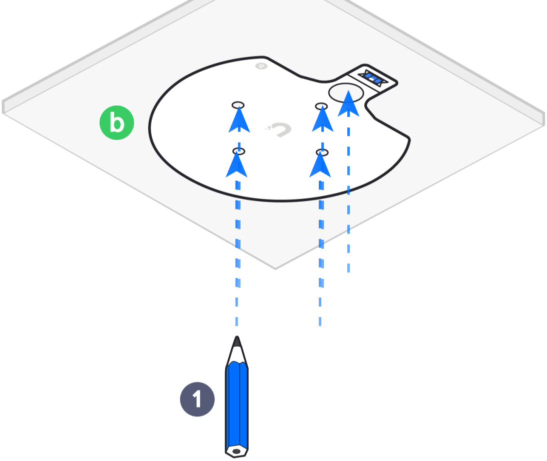

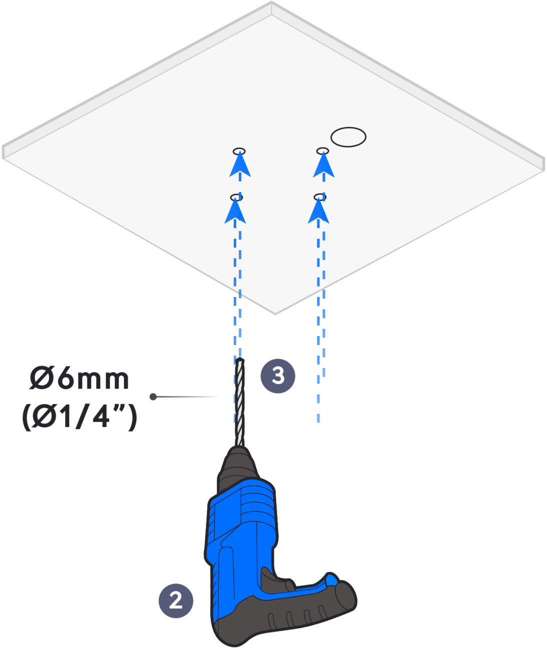

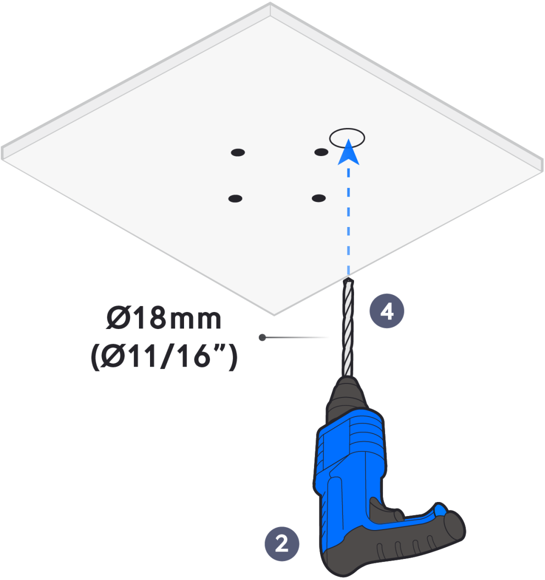
Ø18mm
(Ø11/16”)
4
2

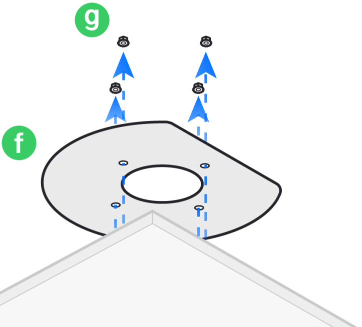

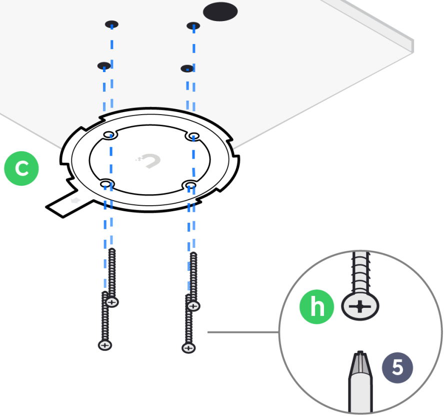

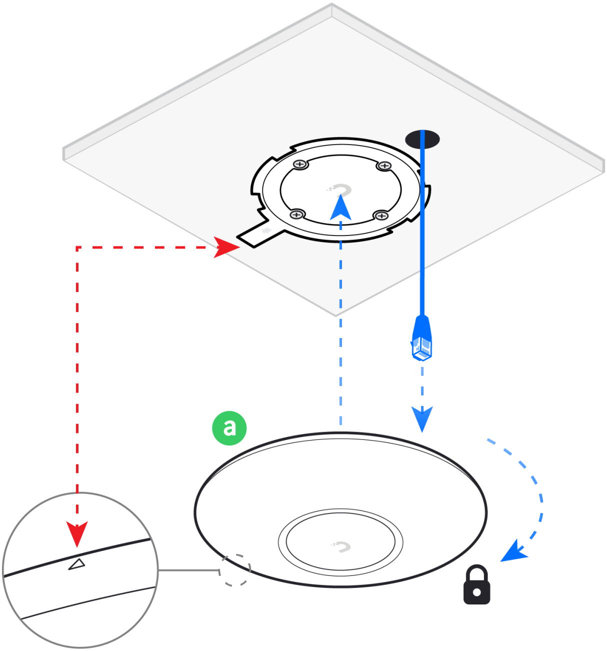

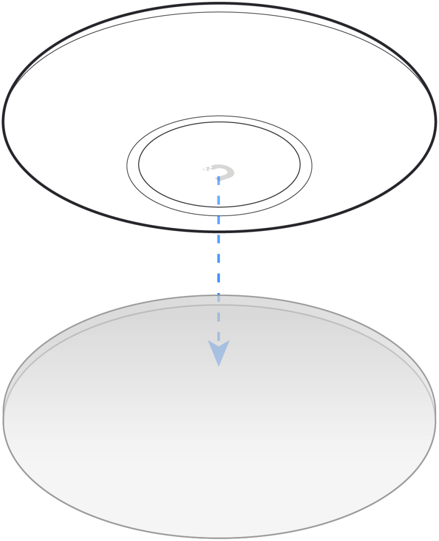

2

A

B

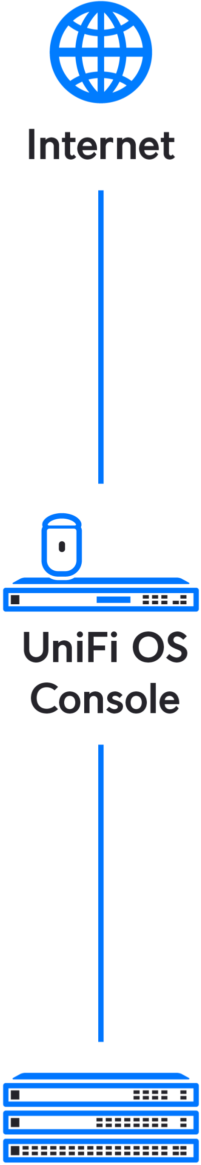
Internet
UniFi OS Console

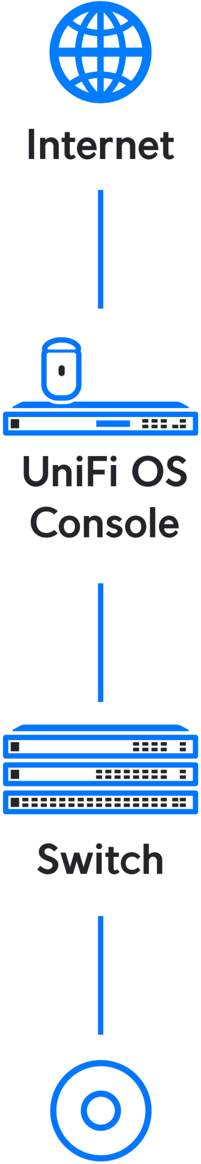
Internet
UniFi OS Console
Switch

Switch

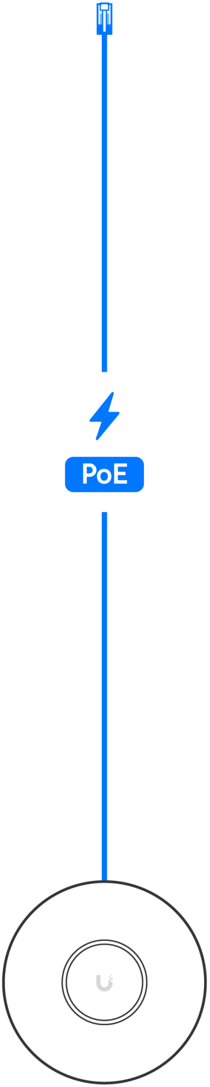

UniFi Access Point

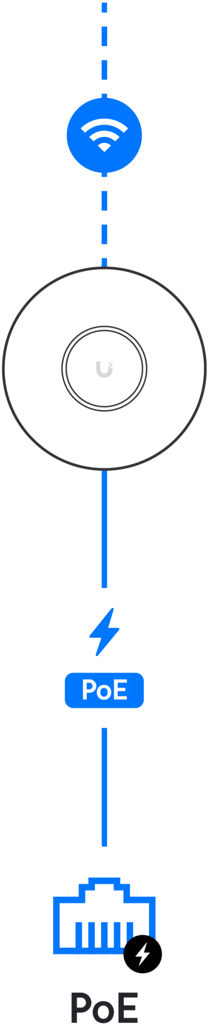

3

Download on the App Store | GET IT ON Google Play

🔗 | 🔗

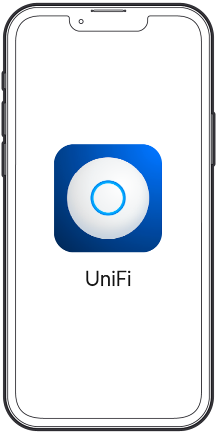

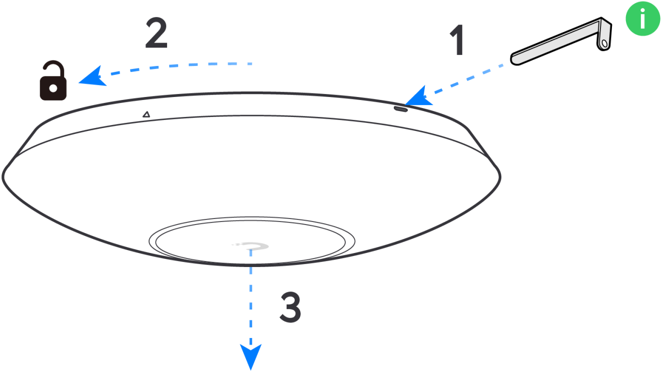

If you need further assistance, visit our Help Center or contact Ubiquiti Support.

©2022 Ubiquiti Inc. All rights reserved. Ubiquiti, Ubiquiti Networks, the Ubiquiti U logo, UniFi and UniFi Network are trademarks or registered trademarks of Ubiquiti Inc. in the United States and in other countries. Apple and the Apple logo are trademarks of Apple Inc, registered in the U.S. and other countries. App Store is a service mark of Apple, Inc, registered in the U.S. and other countries. Android, Google, Google Play, the Google Play logo are trademarks of Google LLC. All other trademarks are the property of their respective owners.